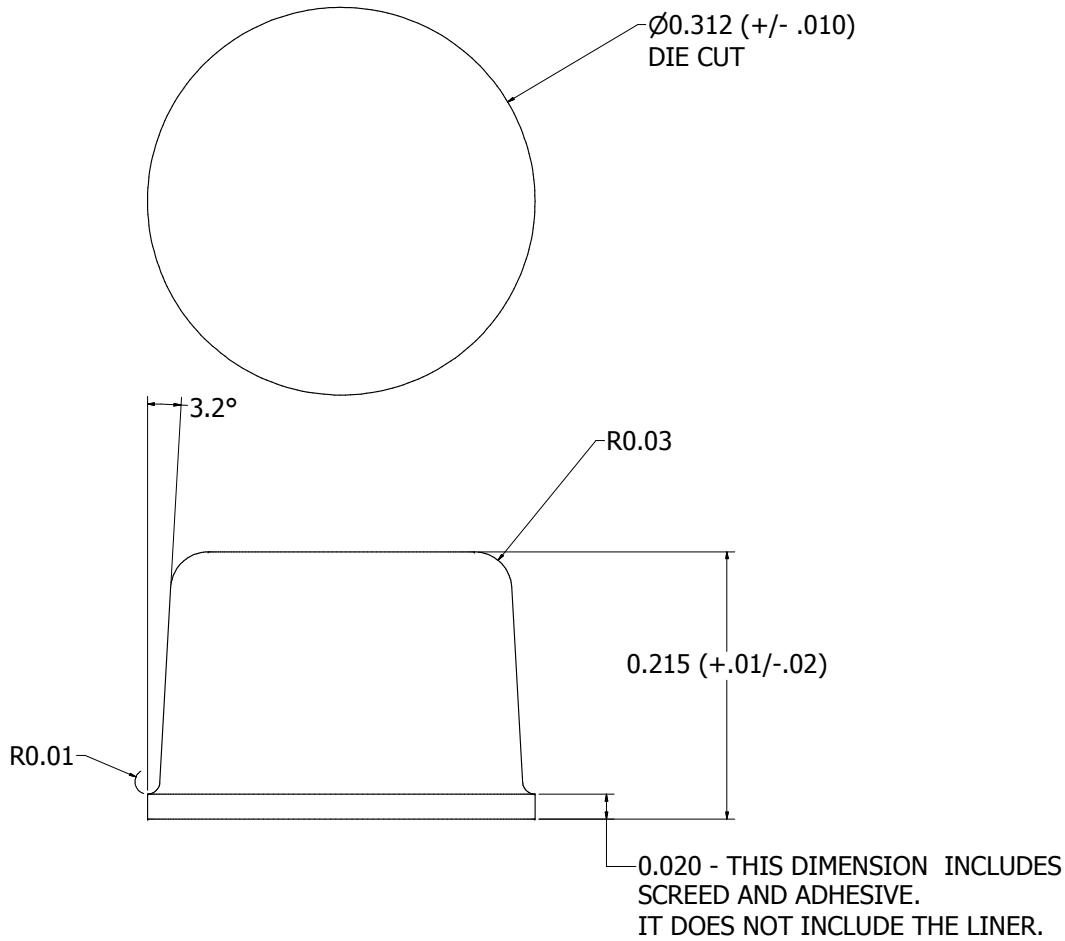

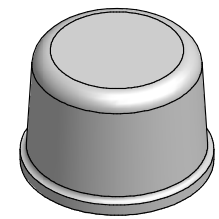

8 X 18 LAYOUT
.428 X .428 OFFSET

ACCESS CODES	451	218					DESIGN REFERENCE	NEXT ASSEMBLY
A			3/1/2006				KEM	
REV	PROJECT ID		DATE		DESCRIPTION		DRWN	CHKD

DRWN aOfpczz	DATE 3/1/2006	MFG	DATE
CHKD	DATE	APPVD	DATE

IATD

DO NOT SCALE DRAWING

SCALE NONE

THIRD ANGLE PROJECTION

INTERPRET PER ASME Y14.5 - 1994

MAX SURFACE ROUGHNESS
☐ ALL SURFACES
☐ MARKED ONLY

TOLERANCES EXCEPT AS NOTED

INCHES
.0 ±
.00 ±
.000 ±
.0000 ±

MILLIMETERS
0 ±
.0 ±
.00 ±
.000 ±

ANGLES ±

3M CENTER ST. PAUL, MN 55144

3M COPYRIGHT 2005
This document is the property of 3M Company.
All rights reserved.

TITLE

SJ61A6
CUSTOM MAKER

FAIRMONT

BLDG. NO. 0001

MN USA

SIZE	DRAWING NUMBER	SHEET	REV
D	12-2907-5747-0	1 OF 1	A